MORE THAN 150 YEARS OF EXPERIENCE OF HANDLING WITH HOOKS

Manual product catalog

Manual winches and hoists

VERLINDE
LIFTING EQUIPMENT

www.verlinde.com

Réf : 11 2011 335 UGB

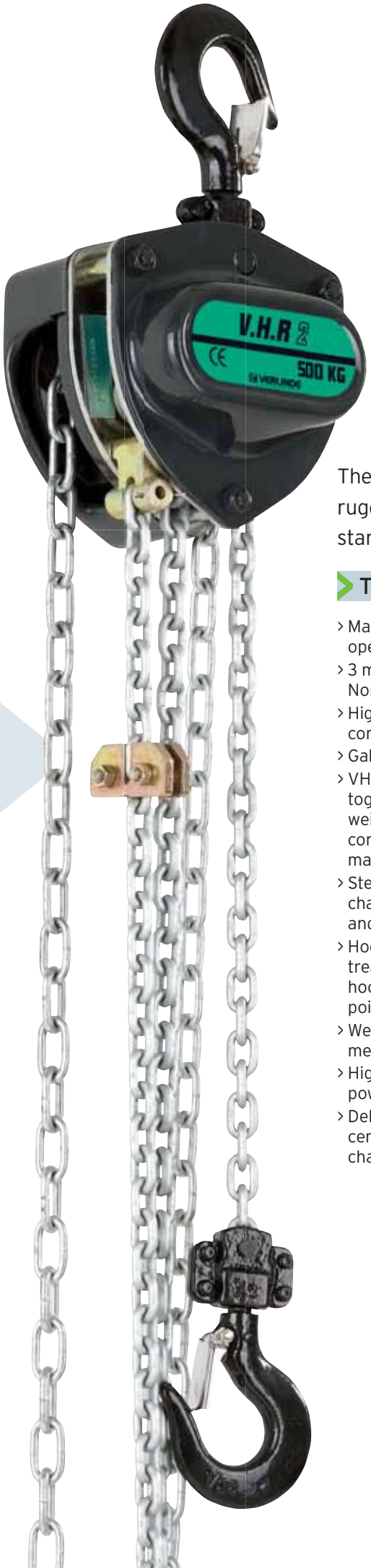

VHR®

Hand chain hoist for loads of 250 to 5,000 kg

The VHR is a compact, high-performance hand chain block with rugged good looks, tested according to official applicable standards.

Technical characteristics

- Machined chain sprocket and gears provide smoother, more efficient operation.
- 3 meters standard lift. Hand chain is 0.5 meters less than lift chain. Non-standard lifts available.
- High strength grade 80 alloy steel load chain with galvanized finish for corrosion resistance (comply with EN 818, safety factor 4).
- Galvanized hand chain made in Europe.
- VHR's compact design offers safety together with reduced weight. Ideal for construction and maintenance applications.
- Steel casing solidly protects chain sprocket, gearcase and handwheel cover.
- Hooks are alloy steel, heat treated and equipped with hook latches and inspection points.
- Weston type load brake mechanism.
- High-resistance RAL 7021 powder coating, 70 µ thick.
- Delivered with CE certificate, and hook and chain certificate.

VHR® HPR
Short headroom trolley operated by hand wheel and chain type CHDD HPR

Options

A wide range of options is available for this hand chain block :

› VHR is stainless steel lift chain and hand chain.
› Chain bag.
› VHR with normal overherad trolley (HPN).
› VHR with short headroom trolley (HPR).
› Ex-Atex version VHR.
› VHR Ex with short headroom trolley.
› VHR with normal headroom trolley.

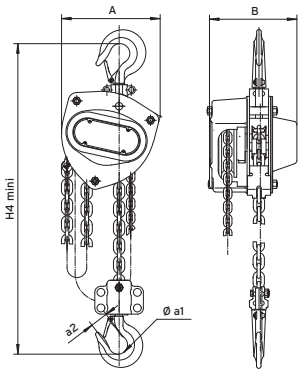

VHR 1-fall

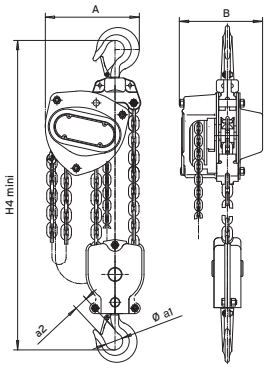

VHR 2-fall

Load	A	B	Øa1	a2	H4 min	Chain size	Num. of falls	Pulling force (kg)	Net weight (kg)
250 kg	121	114	31	21	280	4 x 12	1	25	6.2
500 kg	148	132	35	23	345	5 x 15	1	35	11
1,000 kg	172	151	40	27	376	6 x 18	1	25	12,5
1,500 kg	196	173	45	33	442	7,1 x 21	1	35	17,8
2,000 kg	210	175	50	35	470	8 x 24	1	35	19,5
3,000 kg	255	205	55	39	548	10 x 28	1	40	35
5,000 kg	280	189	65	45	688	9 x 27	2	36	41,3

VHR®
Overhead travel trolley
CHD type

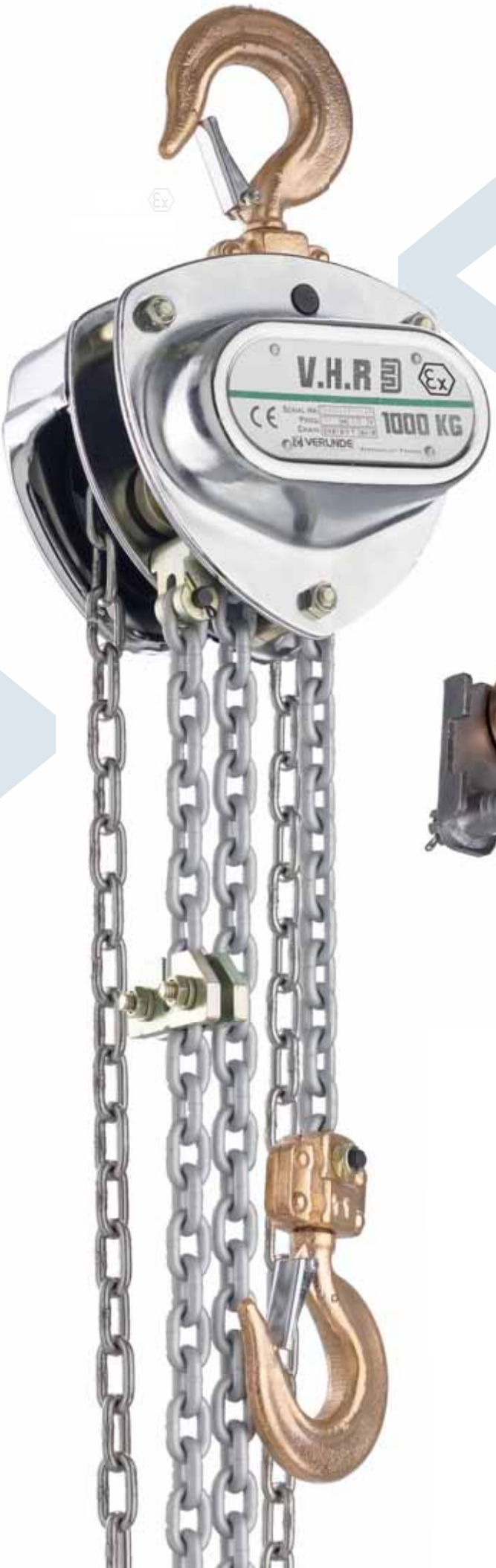

VHR®

Sparkproof hand chain block for loads from **500 to 20,000 kg**

A compact, high-performance chain block with rugged good looks, tested according to official standards.

VHR® HPR

Overhung with travel trolley
CHDD type, low-headroom handwheel and chain operation
Sparkproof version of hand chain block and trolley

Load	A	B	Øa1	a2	H4 min	Chain size	Num. of falls	Pulling force (kg)	Net weight (kg)
500 kg	148	132	35	23	345	5 x 15	1	35	11
1,000 kg	172	151	40	27	376	6 x 18	1	25	12,5
1,500 kg	196	173	45	33	442	7,1 x 21	1	35	17,8
2,000 kg	210	175	50	35	470	8 x 24	1	35	19,5
3,000 kg	255	205	55	39	548	10 x 28	1	40	35
5,000 kg	280	189	65	45	688	9 x 27	2	36	41,3
7,500 kg	433	189	47	67	688	9 x 27	3	38	62
10,000 kg	463	189	75	57	765	9 x 27	4	38	78,5
12,500 kg	430	220	75	54	835	9 x 27	5	38,4	110
16,000 kg	718	200	95	71	900	9 x 27	6	38,7	135
20,000 kg	840	200	106	85	950	9 x 27	8	38,7	192

Technical characteristics

Specification identical to those for the standard version of the VHR except for the following features :

› ATEX Marking : Ex II 2GD c IIC T4 T+135 °C.
› Suitable for Zones 1&2 and 21 and 22 hazardous areas.
› Overload limiter is standard equipment.
› Stainless steel 316L hand chain.
› Bronze coated hooks.
› High-resistance RAL 9006 aluminum-type powder coating, 70 µ thick.
› ISO hooks with safety latch.
› Delivered with CE certificate, and hook and chain certificate.

Options

A wide range of options is available for this hand chain block :

› VHR with stainless steel load chain.
› Chain bag.
› VHR Ex-ATEX HPN with normal headroom.
› VHR Ex-ATEX HPR with short headroom trolley.

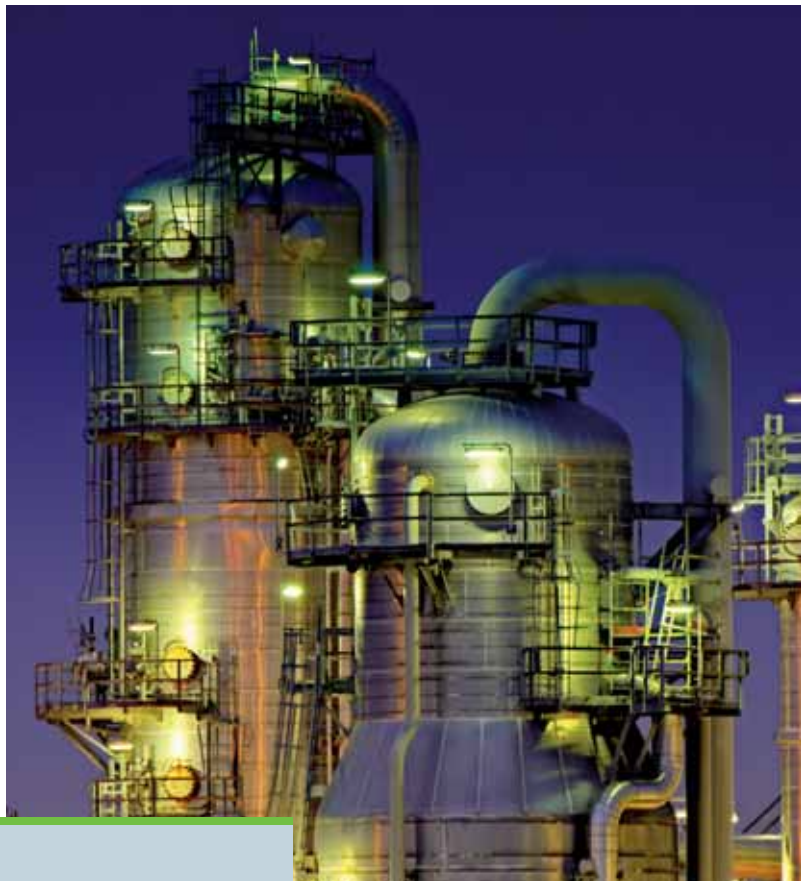

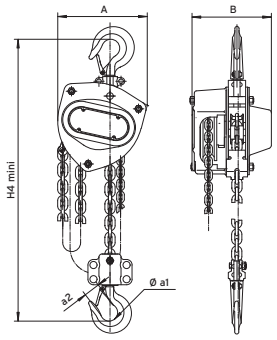

VHR 1-fall

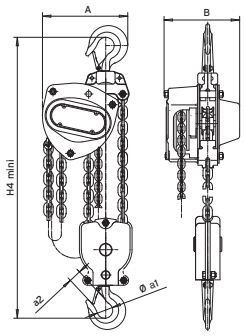

VHR 2-fall

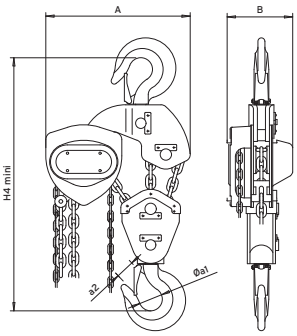

VHR 3-fall

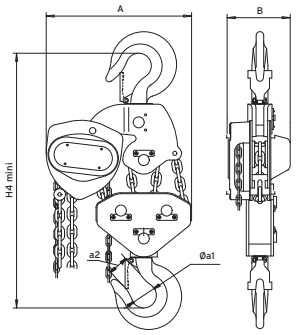

VHR 4-fall

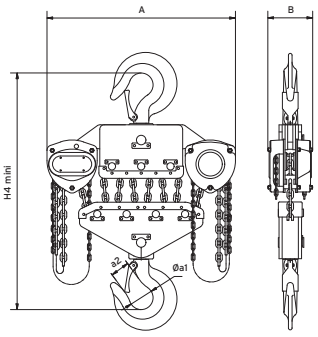

VHR 5, 6 and 8-fall

The VERLINDE Technologies Catalogue with our explosion-proof range is also available

ZHR®

Heavy-duty hand chain block for loads from **500 to 20,000 kg**

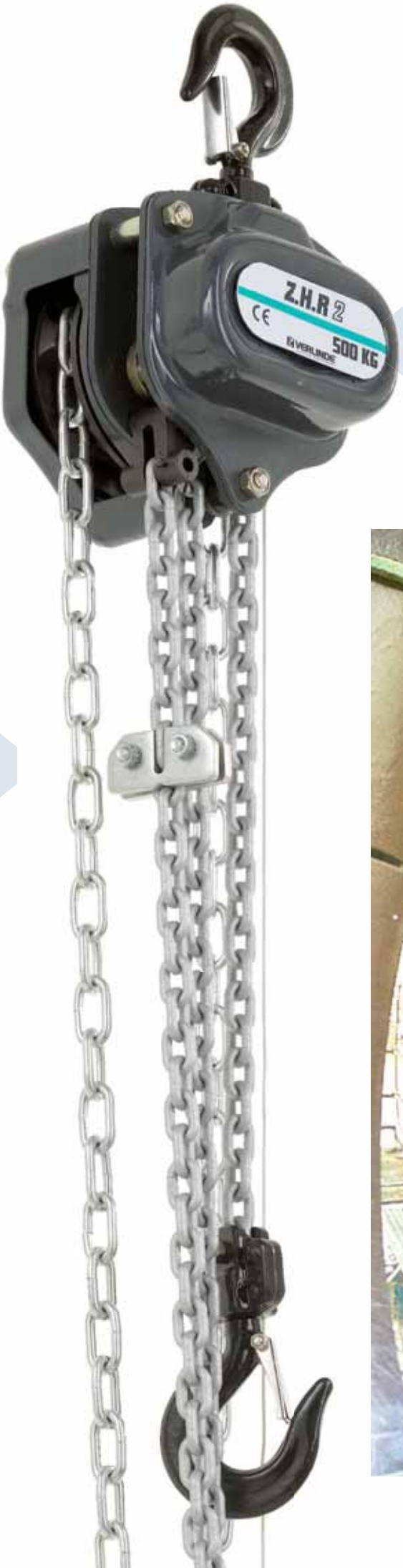

Load	A	B	Øa1	a2	H4 min	Chain size	Num. of falls	Pulling force (kg)	Net weight (kg)
500 kg	148	132	35	23	345	5 x 15	1	35	11
1,000 kg	172	151	40	27	376	6 x 18	1	25	12,5
1,500 kg	196	173	45	33	442	7,1 x 21	1	35	17,8
2,000 kg	210	175	50	35	470	8 x 24	1	35	19,5
3,000 kg	255	205	55	39	548	10 x 28	1	40	35
5,000 kg	280	189	65	45	688	9 x 27	2	36	41,3
7,500 kg	433	189	47	67	688	9 x 27	3	38	62
10,000 kg	463	189	75	57	765	9 x 27	4	38	78,5
12,500 kg	430	220	75	54	835	9 x 27	5	38,4	110
16,000 kg	718	200	95	71	900	9 x 27	6	38,7	135
20,000 kg	840	200	106	85	950	9 x 27	8	38,7	192

Technical characteristics

Specification identical to those for the standard version of the VHR except for the following features :

- Overload limiter is standard equipment.
- Four-bearing lifting mechanism.
- High strength grade 80 alloy steel load chain with corrosion-resistant galvanized (complies with standard EN 818, safety factor 4). Made in Europe.
- Galvanized hand chain made in Europe.
- Upper and lower alloy steel ISO hooks with safety latches.
- Weston-type load brakes.
- Offshore high-resistance RAL 7021 powder coating, 220 µ thick.
- Delivered with CE certificate, and hook and chain certificate.

Options

A wide range of options is available for this hand chain block :

- ZHR with stainless steel load and hand chain.
- Chain bag.
- ZHR HPN with normal headroom.
- ZHR HPR with short headroom trolley.

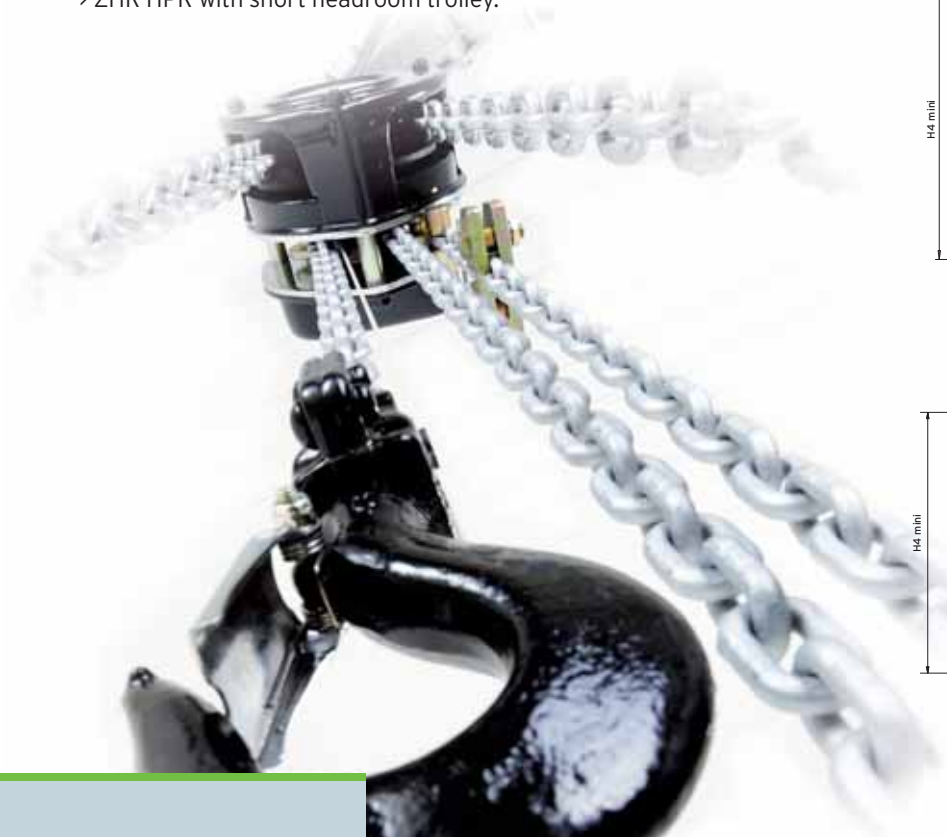

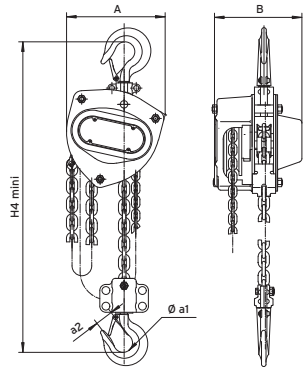

ZHR 1-fall

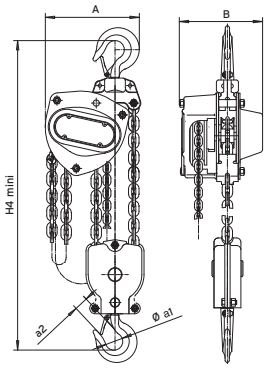

ZHR 2-fall

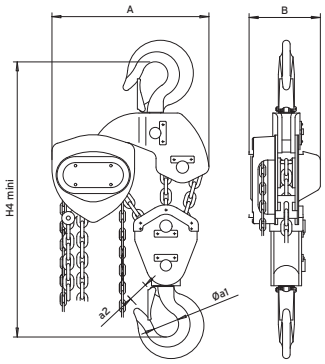

ZHR 3-fall

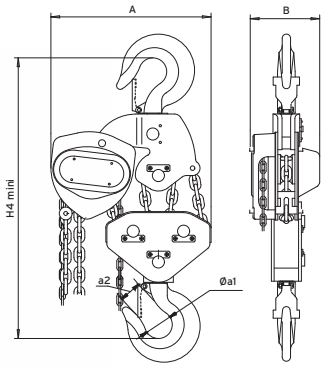

ZHR 4-fall

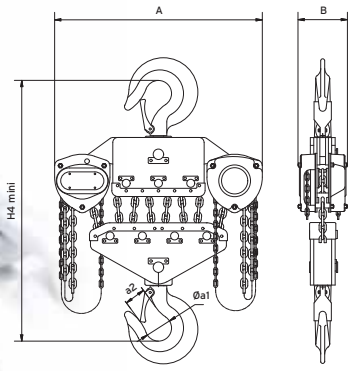

ZHR 5, 6 and 8-fall

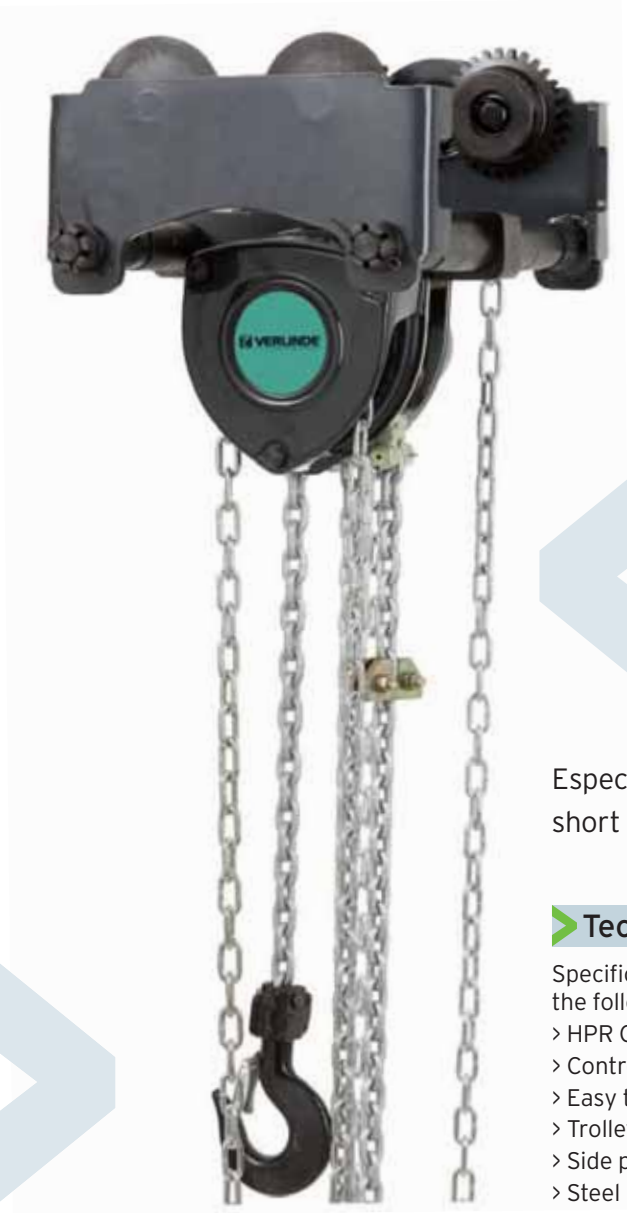

VHR-HPR®
ZHR-HPR®

Low headroom version manual travelling trolley hoist for loads from **500 to 20,000 kg**

Especially designed for use in areas where optimal use of short headroom is essential.

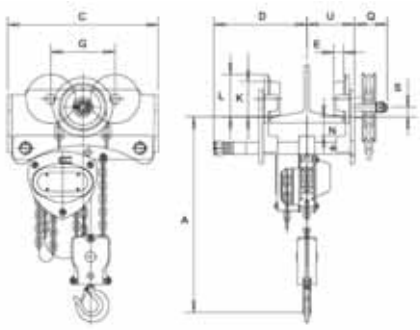

Technical characteristics

Specifications of the VHR (see page 2) and of the ZHR (see page 6) plus the following features :

- HPR CHDD for overhead VHR or ZHR manual chain block.
- Controlled via handwheel and chain.
- Easy to adjust for different flange widths up to 305mm.
- Trolley body made of high-resistance steel.
- Side plates finished with RAL 7021 dark gray coating, 70 µ thick.
- Steel rollers machined for smooth movement.
- Rollers compatible with all types of I and H beams.
- Wheel ball bearings are moisture-tight and maintenance free.
- Galvanized hand chain.
- Fall-prevention brackets and rubber stops.
- Loads up to 20 tons.
- Serial number inscribed on chassis.

Options

- Ex version with ATEX Marking.
- Stainless steel lift and hand chains.

Load	Range	Num. of falls	A (mm)	C (mm)	D (mm)	E (mm)	G (mm)	K (mm)	L (mm)	N (mm)	Q (mm)	S (mm)	U (mm)	Weight w/o chain	Additional weight per m of lifting height	Pulling force (N)
500 kg	50-203	1	299	258	119	17	100	55	67	29	57	9	95	19	1.6	240
1,000 kg	64-305	1	331	292	150	18	125	68	82	37	57	18	125	37	2.1	265
1,500 kg	74-305	1	383	319	156	20	130	74	88	38	57	18	125	37	2.1	265
2,000 kg	88-305	1	410	358	159	22	135	80	94	38	57	18	129	50	2.4	335
3,000 kg	100-305	1	461	434	167	25	158	100	115	40	59	8	132	65	2.5	372
5,000 kg	114-305	2	655	448	177	34	170	108	126	42	59	25	138	91	4.8	360
7,500 kg	124-305	3	750	624	186	39	190	130	153	45	66	20	146	135	7.2	365
10,000 kg	124-305	4	755	636	189	40	200	134	155	45	66	35	148	153	9.6	380
12,500 kg	124-305	5	830	668	191	43	200	150	170	50	66	26	150	242	12	420
16,000 kg	136-305	2 x 3	930	791	222	50	272	166	196	50	77	8	193	278	14.4	400
20,000 kg	136-305	2 x 4	950	891	229	52	272	172	198	58	77	5	193	353	19.2	440

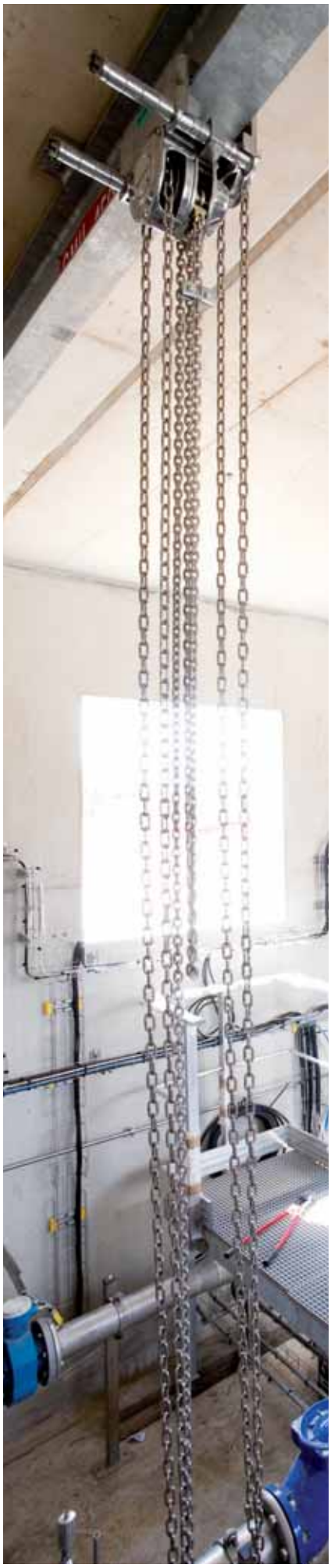

PLV®

Manual Lever Hoist for loads from 250 to 3,000 kg

The PLV manual lever hoist is a compact unit for lifting, pulling and sliding. Especially suitable for industrial use. Easy to handle, this convenient unit can is ready for all sorts of jobs anywhere at the production or building. Great for tight spots where headroom is limited.

Technical characteristics

- Four good-looking, robust, compact lightweight, easy handling models.
- PLV can be used in any position; simply switch the lever to make the PLV easier to handle.
- Made with special steels, PLV lever hoists are very compact.
- The lever hoist – a new concept combining good looks with reliability.
- Chrome-plated steel hoist and lever.
- Reinforced casing effectively protects mechanisms.
- Lever rotates 360°.
- Rubber grip.
- Weston-type load brake with four braking surfaces.
- Braking mechanism fully protected against dust and splashing.
- Extra-safe, lightweight and low-maintenance.
- Chain can be declutched when winch is not loaded.
- High-strength grade 80 steel alloy chain. Galvanized for corrosion resistance.
- Complies with EN 818, safety factor 4.
- Made in Europe.
- Delivered with CE certificate, and hook and chain certificate.
- Treated steel alloy upper and lower ISO turning hooks with safety latches and inspection points.

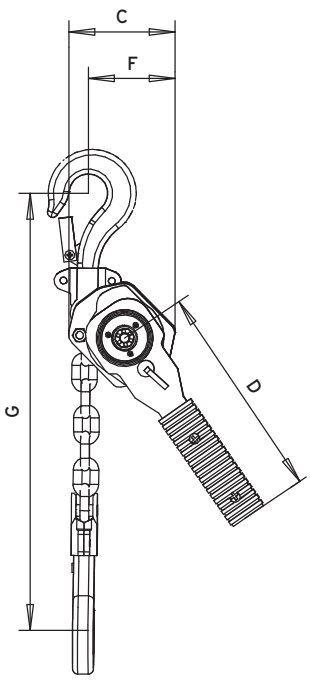

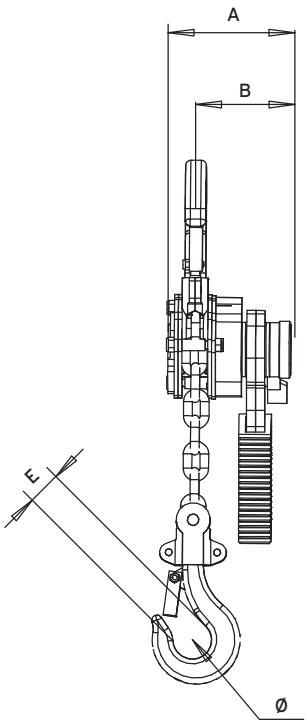

Capacity	A	B	C	D	E	F	G	Ø	Lifting height (m)	Num. of falls	Chain diam. (mm)	Weight (kg)
250 kg	92	71	70	168	20	50	245	31	1	1	4	2,1
750 kg	149	89	128	308	26	85	310	37	1	1	6	6,2
1,500 kg	171	102	145	408	36	130	385	45	1,5	1	7	9,5
3,000 kg	204	114	203	418	44	150	460	55	1,5	1	10	20,2

› Treated steel alloy upper and lower ISO turning hooks with safety latches and inspection points.

› Chain can be declutched when winch is not loaded.

› Lever can rotate 360°. Rubber grip.

Load Capacity

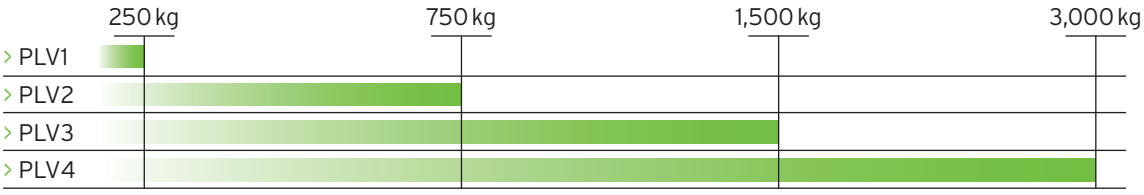

TLV®

Manual Lever Winch for loads from **800 to 3,200 kg**

The TLV lever winch is designed for lifting and pulling loads over long distances.

Technical characteristics

- Designed for lifting and pulling loads over long distances.
- Built with high resistance aluminum, making it light and easy to handle.
- Heavy duty tool suitable for tough working conditions.
- Low maintenance make it suitable for outdoor work.
- Delivered with a 20m / 40m rope.
- Delivered with CE certificate, and hook and chain certificate.

Load Capacity

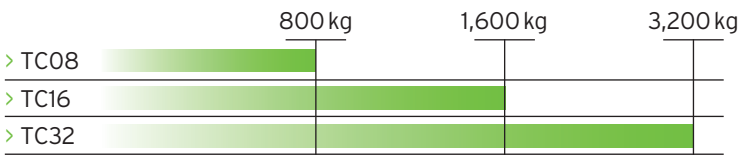

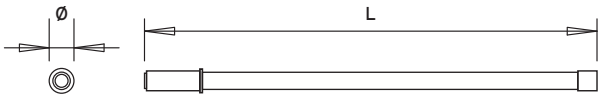

Type	S.W.L (kg)	Diameter (mm)	L (mm)	L bent (mm)
TC08	800	32	790	-
TC16	1600	34	1121	85
TC32	3200	34	1121	85

TLV lever

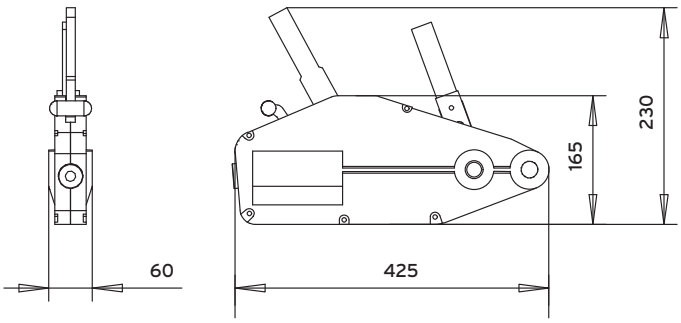

TC08

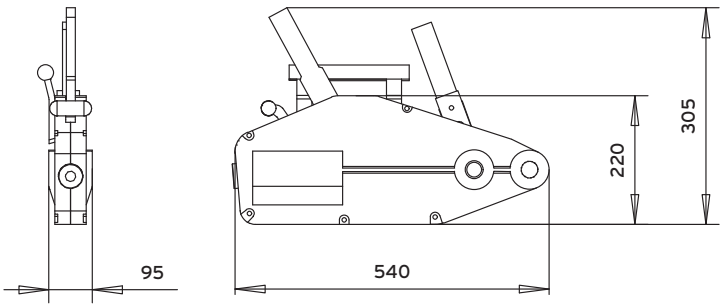

TC16

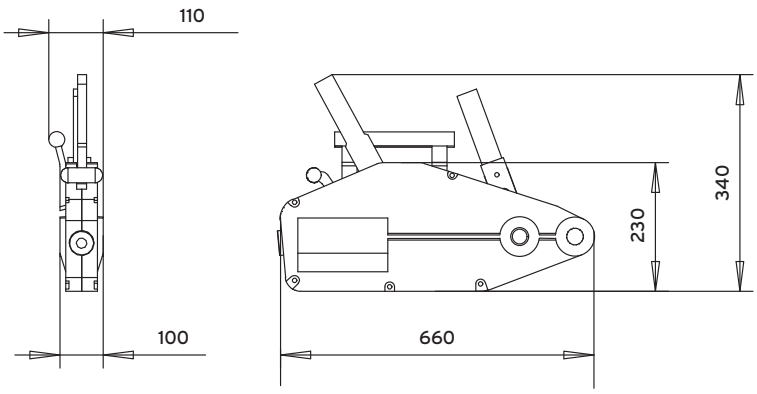

TC32

Type	S.W.L (kg)	Lever length (mm)	Effort on lever (kg)	Rope dis. (mm)	Rope length (m)	Breaking load (kg)	Dimensions (mm)	Net weight (kg)
TC08	800	800	28,5	8	20	4800	425 x 60 x 230	6
TC16	1600	1120	41	11	20	9600	540 x 95 x 305	11
TC32	3200	1120	44	16	20	19200	660 x 110 x 340	22

ME & MV

Endless screw winch and geared winch 150 to 3,000 kg

ME type winch.

MV type winch.

Technical characteristics

- Encased mechanism.
- Automatic brake.
- Adjustable removable crank.
- Can be attached horizontally or vertically (depending on model).
- Very robust thanks to exceptionally sturdy chassis.
- Mechanical parts protected with cataphoretic coating.
- Can be declutched only when unloaded; safety system prevents declutching when loaded.

Type of Winch	ME1	ME2	ME3	ME4	ME5	MV1	MV2	MV3	MV4	MV5	MV6
1st level load capacity (kg)	150	300	500	1,000	2,000	250	500	1,000	1,500	2,000	3,000
Total rolling capacity (m)	19	38	17	30	25	15	17	30	23	17	10
Max. number of layers	6	6	4	4	3	4	4	4	3	2	1
Crank force required (daN)	20	12,5	19	14,5	16,5	11	14	14	14	14,5	16
Weight without cable (kg)	5,6	15	15	44	83	7,5	12	37,5	45	70	120
Max and min use temperature	- 20°C to + 40°C										

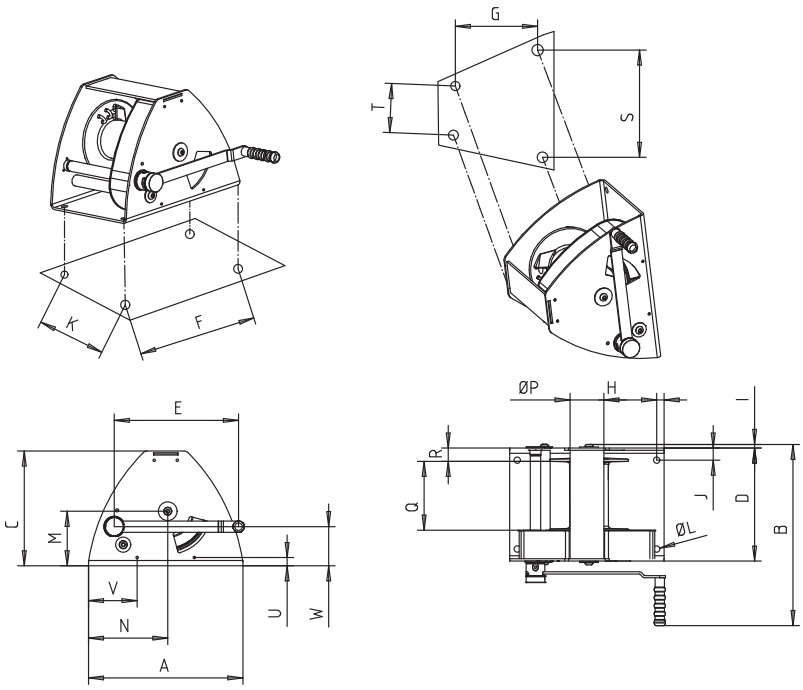

ME Type

Capacity	A	B	C	D	E	F	G	H	I	J	K	ØL	M	N	ØP	Q	R	S	T	U	V	W	X
150 kg	180	325	147	157	340	154	100	13	4	22	114	8Ø9	73	90	40	77	24	132	48	31	24	73	90
300 kg	249	400	190	217	240	200	145	18	8	37	144	8Ø13	95	120	62	124	25	184	76	25	33	58	51
500 kg	249	400	190	217	240	200	145	18	8	37	144	8Ø13	95	120	62	124	25	184	76	25	33	58	51
1,000 kg	410	485	305	300	340	370	-	20	10	32	236	4Ø17	145	200	103	180	35	-	-	-	-	104	68
2,000 kg	510	585	360	400	340	440	-	35	11	38	325	4Ø21	151	187	118	248	47	-	-	-	-	267	191

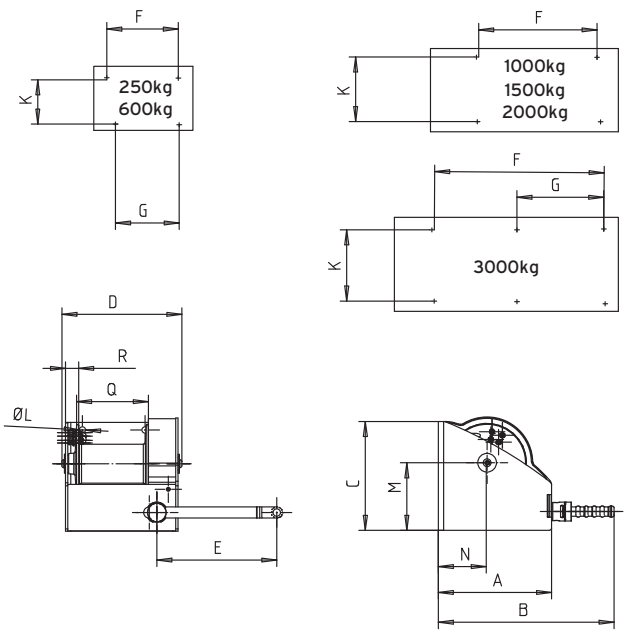

MV Type

Capacity	A	B	C	D	E	F	G	H	J	K	ØL	M	N	ØP	Q	R
250 kg	150	330	150	200	250	137	100	25	15	118	4Ø11	89	75	60	100	24
500 kg	180	360	180	260	250	182	130	32	18	142	4Ø13	109	90	70	145	30
1,000 kg	300	490	300	300	340	167	-	32	21	250	4Ø17	180	146	101	176	30
1,500 kg	300	490	300	300	340	167	-	32	21	250	4Ø17	180	146	101	176	30
2,000 kg	345	540	345	405	340	160	-	40	25	295	4Ø21	222	168	121	275	40
3,000 kg	525	700	460	510	340	390	70	40	380	6Ø25	325	173	168	300	55	248

> ME type mechanism
Gears have passed every type of breakage and endurance test. Sprockets are machined to hold grease. Ratchet brake with stainless steel spring has been proven the best system for this type of equipment.

> Releasable drum
Except on 250kg model, MV winches feature a drum that can be disengaged with a small, easily accessible lever. A safety mechanism prevents any declutching when the winch is loaded.

> Adjustment knob
Conveniently captive knob adjusts crank tightness. Cannot get lost.

> MV type mechanism
Wheel and worm gear have Gears have passed every type of breakage and endurance test fir maximum reliability. Sprockets are machined to hold grease. Ratchet brake with stainless steel spring has been proven the best system for this type of equipment.

VERLINDE is :

- The leading French manufacturer and exporter of lifting and handling equipment.
- A comprehensive range of 30 groups of lifting equipment from 60 to 250,000 kg.
- ISO 9001 Quality control certified.

Our references

Metallurgical, Mechanical, Nuclear industries ArcelorMittal - Unimetal - Stein - NFM - Framatome - Alstom

Chemical and Petrochemical industries Sanofi Aventis - Du Pont De Nemours - Total

Aeronautics industry Aérospatiale - Airbus - Eurocopter - Air France - Aéroport de Paris - Snecma - Dassault Aviation

Agri-food industry Nestlé - Danone - Bel

Automobile industry Renault - Peugeot - Citroën - Scania - Ford - RVI - Volkswagen - Michelin - Massey Fergusson - Manitou - Toyota Industrial Equipment

Other sectors EDF - SNCF - RATP - Spie - Degremont - Eiffage - Polysius - Baudin Chateauneuf

In France :

A sales network and after sales service points, EUROPONT travelling crane construction plants and a distributor network.

Rest of world :

A customer service in more than 55 countries.

Cover : VHR non standard specially made for use in extrem cold condition.
Photo credit : VERLINDE.

VERLINDE
LIFTING EQUIPMENT

2, boulevard de l'Industrie - B.P. 20059 - 28509 Vernouillet cedex - France
Phone : **(33) 02 37 38 95 95** - Fax : **(33) 02 37 38 95 99**
Internet : **www.verlinde.com**